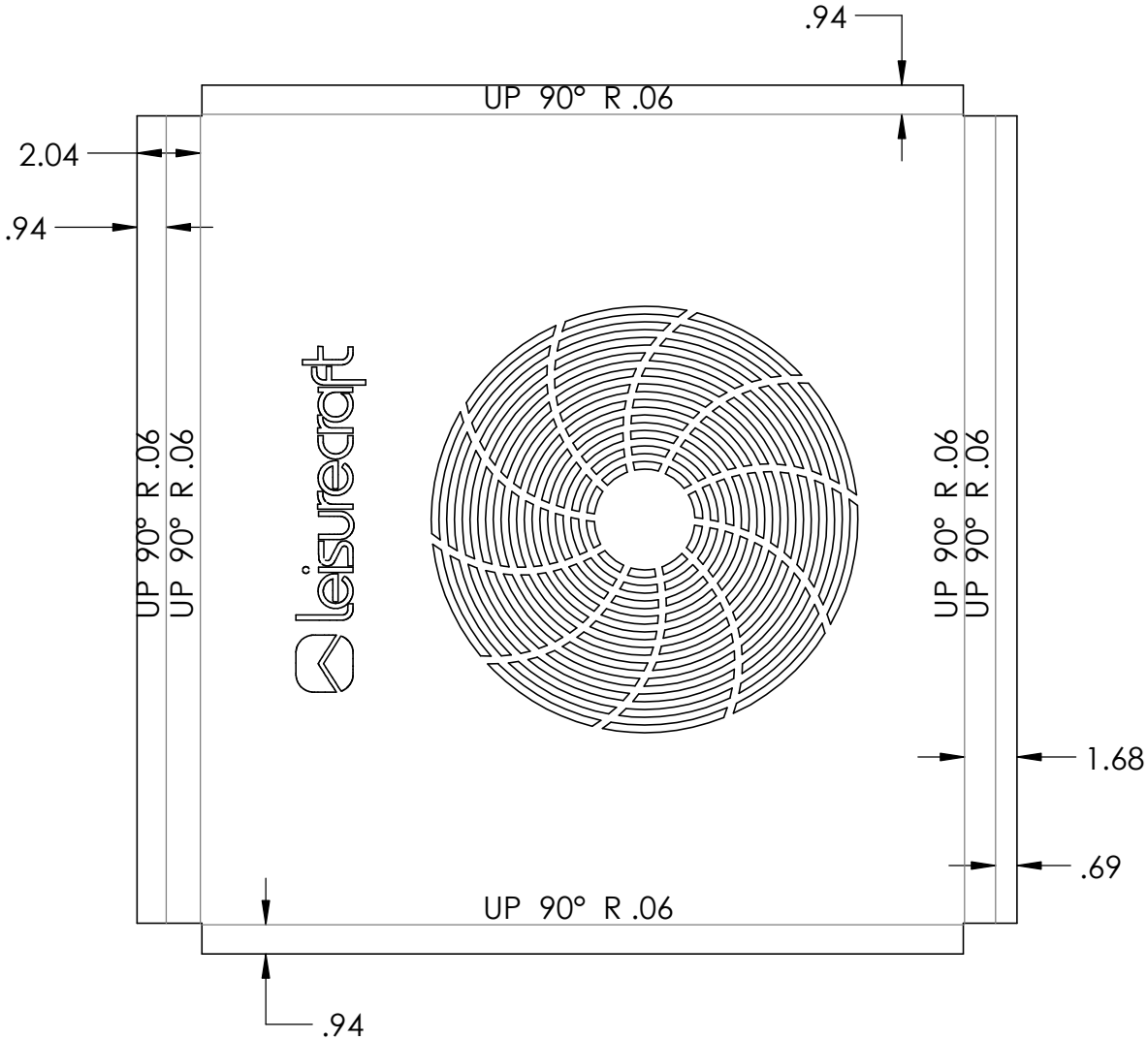

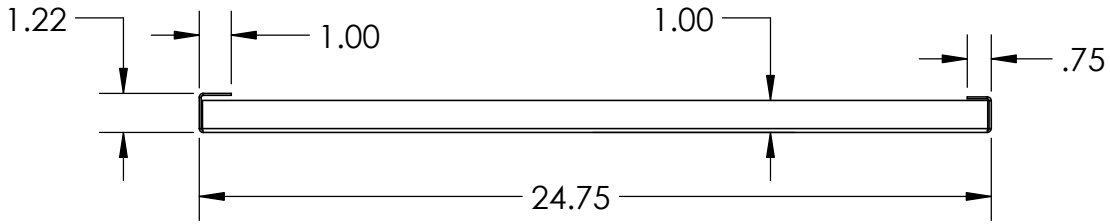


| | | | |
|---|---|---|---|
| leisurecraft BUILDING LUXURY | DESCRIPTION: Access Panel | MATERIAL: 16 GA SS 304 | REV: A8 |